Supereulerian 2-edge-coloured graphs

Anders Yeo

yeo@imada.sdu.dk
Department of Mathematics and Computer Science
University of southern Denmark
Campusvej 55, 5230 Odense M, Denmark

Joint work with: Jørgen Bang-Jensen and Thomas Bellitto

Definitions

We will consider 2-edge-coloured graphs.

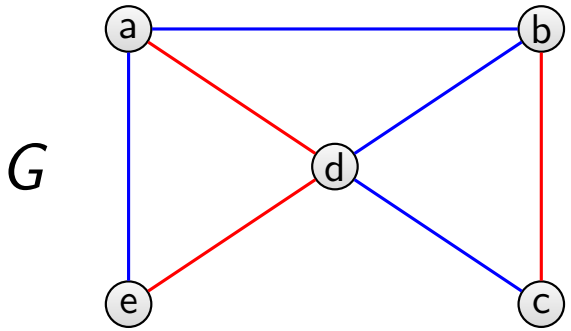

G is **supereulerian** if G contains a spanning closed trail in which the edges alternate in colours.

G is **eulerian** if G contains a closed trail in which the edges alternate in colours and all edges are used exactly once.

Initial thoughts

When is a 2-edge-colored graph eulerian?

When all vertices have the same number number of red and blue edges incident with them and the graph is connected (Polynomial).

When is a 2-edge-colored graph supereulerian (i.e. contains a spanning eulerian subgraph)?

Theorem 1. (JBJ, TB, AY): It is NP-hard to decide if a 2-edge-colored graph supereulerian.
(This is one of the results we will prove later)

Why are 2-edge-coloured graphs interesting?

2-edge-coloured graphs generalize directed graphs.

One transformation is to substitute every arc xy with a red-blue path $xu_{xy}y$, as follows.

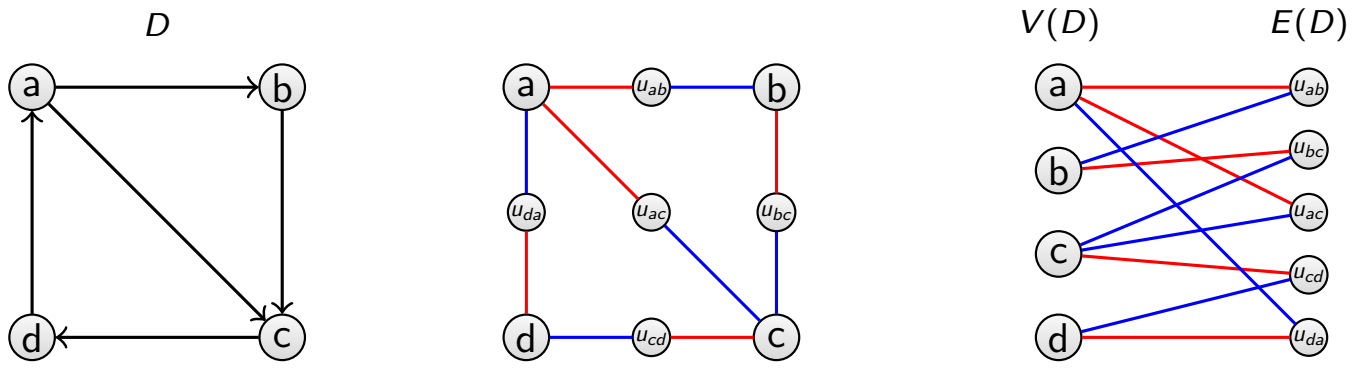

Note that any path, walk, trail, cycle, etc. in D corresponds to an alternating path, walk, trail, cycle, etc. in the 2-edge-coloured graph.

Also note that G is bipartite.
In fact bipartite 2-edge-coloured graphs correspond to digraphs!

bipartite 2-edge-coloured graphs vs. digraphs

Let G be a bipartite 2-edge-coloured graph and define D as follows.

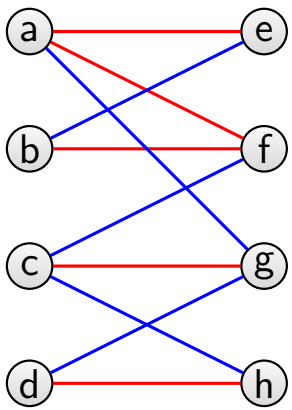

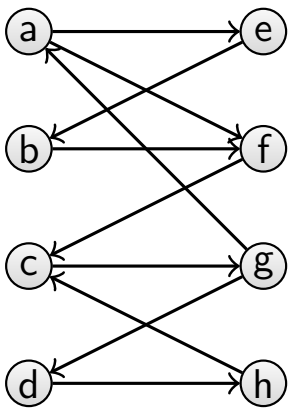

All red edges are oriented left-to-right and all blue edges are oriented right-to-left.

Again paths, trails, walks, cycles correspond in the two graphs.

So one can think of bipartite 2-edge-coloured graphs as "equivalent" to bipartite digraphs.

What about 2-edge-coloured graphs in general? They generalize digraphs!

Trail-colour-connected (necessary condition)

Consider the following supereulerian (and eulerian) 2-edge-colored graph:

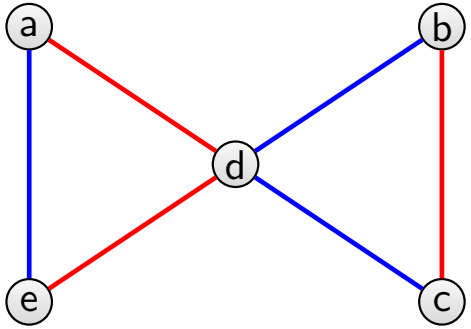

A 2-edge-coloured graph is **(trail-)colour-connected** if it contains a pair of alternating (u, v)-paths ((u, v)-trails) whose union is an alternating closed walk for every pair of distinct vertices u, v.

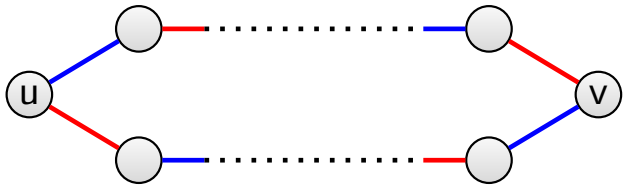

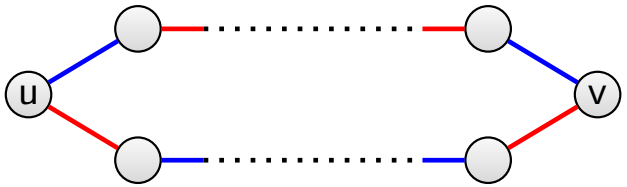

Supereulerian implies trail-colour-connected.

Our above example is trail-colour-connected, but not colour-conneceted.
(Any alternating (b, c)-path starts and ends in a red edge).

Eulerian factor (necessary condition)

An **eulerian factor** of a 2-edge-coloured graph is a collection of vertex disjoint induced subgraphs which cover all the vertices of G such that each of these subgraphs is supereulerian.

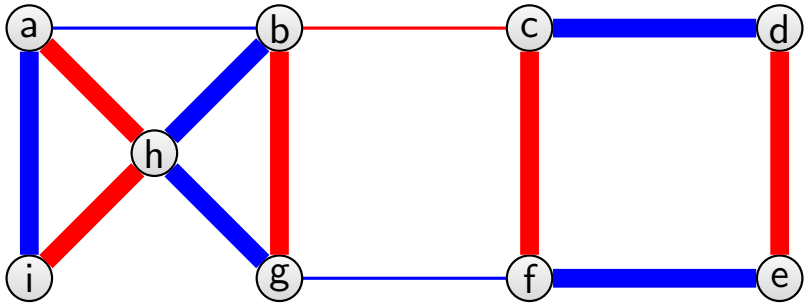

The above contains a eulerian factor.

But it is not trail-colour-connected and therefore also not supereulerian.
(Any alternating (d, b)-trail starts in a blue edge.)

Supereulerian implies a eulerian factor (with only 1 component).

Necessary conditions for supereulerian

We have shown that a supereulerian 2-edge-coloured graph

- is trail-colour-connected and
- has a eulerian factor.

Unfortunately the above is not sufficient for a general 2-edge-coloured graph to be supereulerian (which we will see later).

But for some classes of 2-edge-coloured graphs it is (e.g complete bipartite graphs and M-closed graphs).

We will now show that each of the above necessary conditions can be decided in polynomial time.

trail-colour-connected is polynomial

Theorem 2. (JBJ, GG): In a 2-edge-coloured graph, G, we can in polynomial time decide if there is a (x, y)-alternating path starting with colour c_1 and ending with colour c_2.

"Proof by picture": Is there a (x, y)-path starting and ending in red?

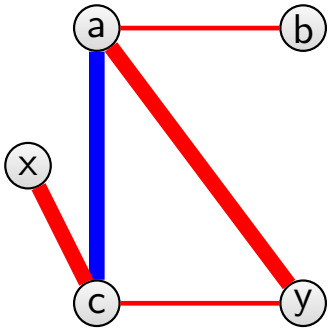

Alternating (x, y)-path starting/ending in red?

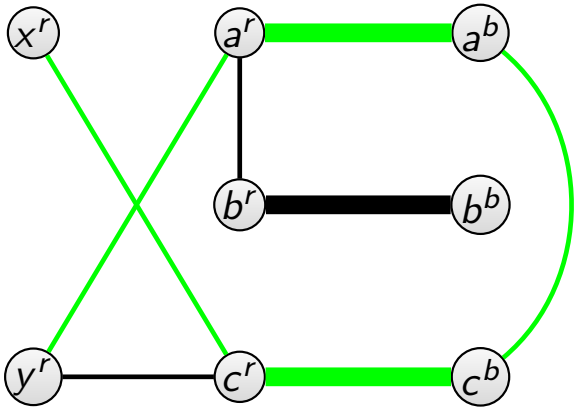

Augmenting path?

As we can find an augmenting path in polynomial time, the above is polynomial.

trail-colour-connected is polynomial

Theorem 3. (JBJ, TB, AY): In a 2-edge-coloured graph, G, we can in polynomial time decide if there is a (x, y)-alternating trail starting with colour c_1 and ending with colour c_2.

Proof:

- Duplicate every vertex of G.
- Substitute edges as follows.

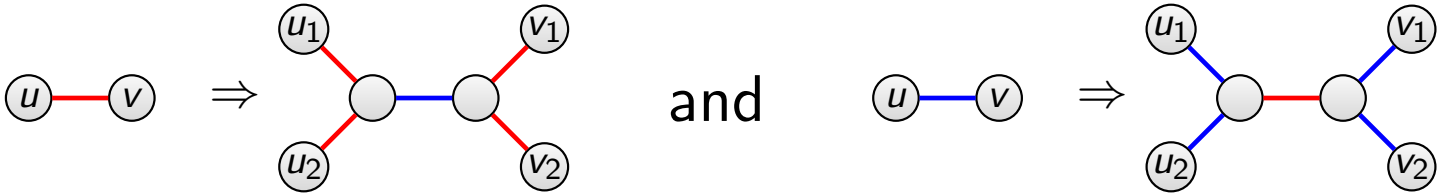

- Decide if there is a (x, y)-alternating path in the resulting graph, H.

The above works as any minimal alternating (x, y)-trail will visit each vertex at most twice.

trail-colour-connected is polynomial, Illustration

Here is an example!

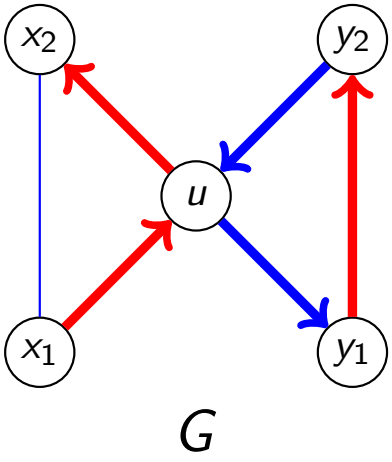

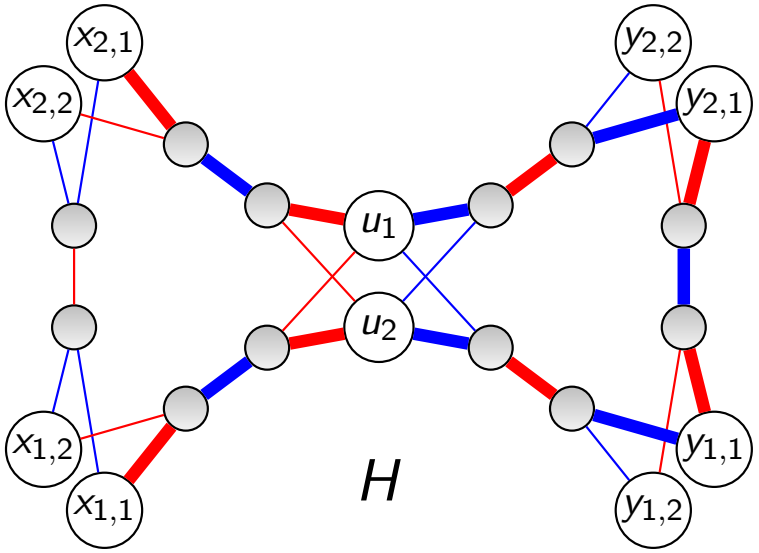

There is an alternating (x, y)-trail in G if and only if there is an alternating (x, y)-path in H.

Lets consider a (x_1, x_2)-path/trail starting and ending in a red edge.

Eulerian factor is polynomial

Theorem 4. (JBJ, TB, AY): We can in polynomial time decide if a 2-edge-coloured graph, G, contains a eulerian factor.
Proof: We will reduce this to a matching problem in H.

- Assume x is incident with $b(x)$ blue edges and $r(x)$ red edges.

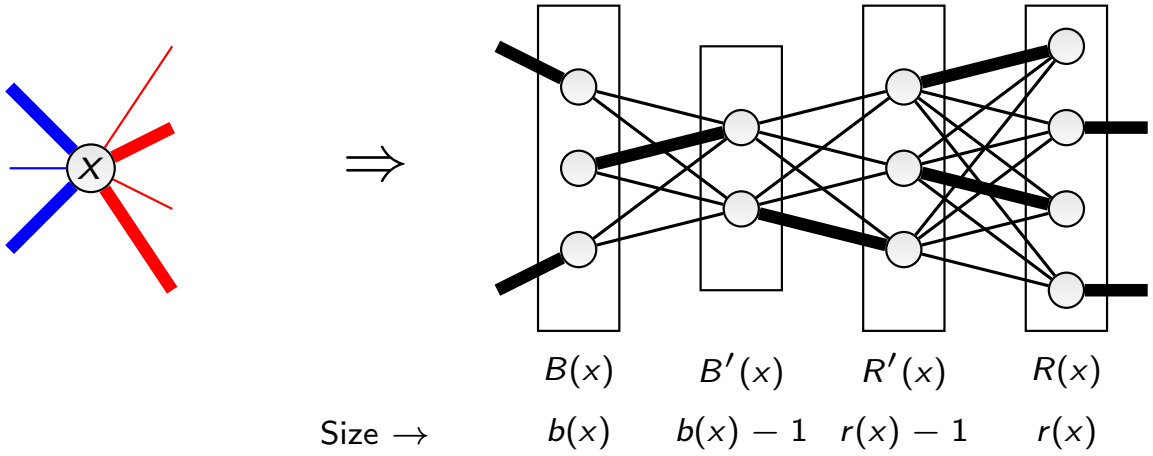

- Now if there is a blue edge xy in G then add exactly one edge from $B(x)$ to $B(y)$...
- If q $(B'(x), R'(x))$-edges are used, then $b(x) - 1 - q$ $(B(x), B'(x))$-edges are used, so $q + 1$ edges "out" of $B(x)$ is used.

Eulerian factor is polynomial

And $r(x) - 1 - q$ ($(R(x), R'(x))$-edges are used, so $q + 1$ edges "out" of $R(x)$ is used.

So if there is a perfect matching in H, then every vertex in G is incident with equally many red and blue edges.

So G has a eulerian factor.

Conversely if G has a eulerian factor then we can find a perfect mtching in H.

Therefore deciding if G has a eulerian factor is polynomial.

Recall...

We have shown that a supereulerian 2-edge-coloured graph

- is trail-colour-connected (**Polynomial**) and
- has a eulerian factor (**Polynomial**).

We will now show the following.

- A 2-edge-coloured complete bipartite graph is supereulerian if, and only if, it is trail-colour-connected and has a eulerian factor.
- For 2-edge-coloured complete multipartite graphs the above is not sufficient.
- We will, if time, briefly mention that 2-edge-coloured M-closed graphs are supereulerian if, and only if, they are trail-colour-connected and have a eulerian factor.
- We will also briefly discuss the NP-hardness of deciding if a 2-edge-coloured graph is supereulerian.

We will also mention some open problems.

Complete 2-edge-coloured bipartite graphs

Recall the transformation between 2-edge-coloured bipartite graphs and bipartite digraphs.

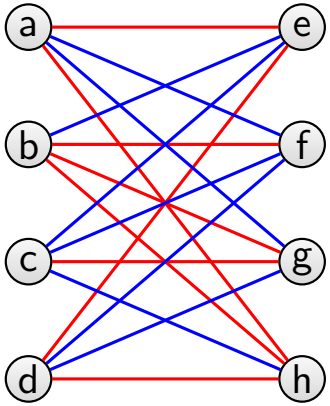

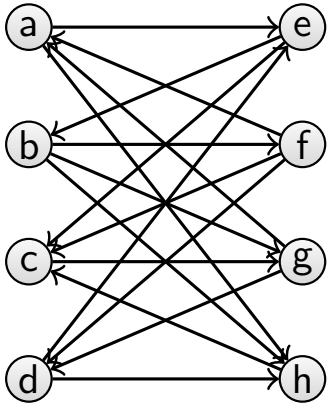

Theorem 5. (JBJ, AM): A semicomplete multipartite digraph is supereulerian if and only if it is strongly connected and has an eulerian factor.

Theorem 6. (JBJ, TB, AY): A 2-edge-coloured complete multipartite digraph is trail-colour-connected if and only if it is colour-connected.

Complete 2-edge-coloured multipartite graphs

Theorem 5. (JBJ, AM): A semicomplete multipartite digraph is supereulerian if and only if it is strongly connected and has an eulerian factor.

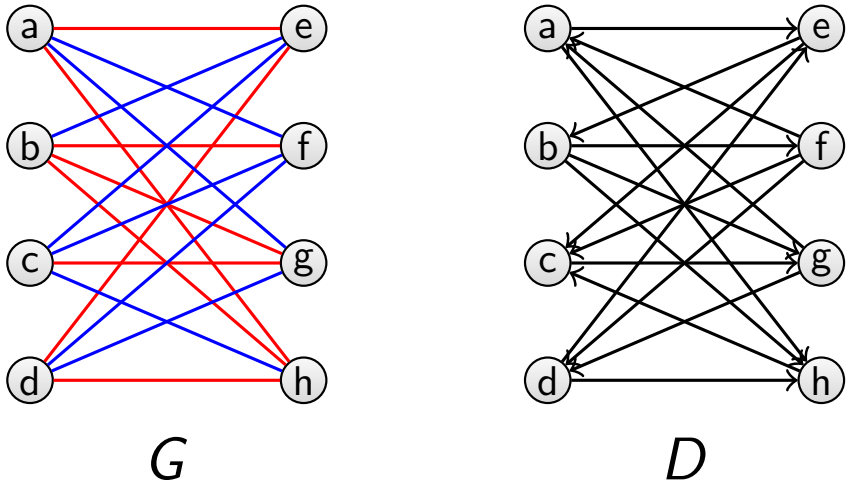

D strong $\Leftrightarrow$ G colour-connected $\Leftrightarrow$ G trail-colour-connected.

D has a eulerian factor $\Leftrightarrow$ G has a eulerian factor.

Theorem 7. (JBJ, TB, AY): A 2-edge-coloured complete bipartite graph is supereulerian if, and only if, it is trail-colour-connected and has a eulerian factor.

2-edge-coloured complete multipartite graphs

There exists infinitely many non-supereulerian 2-edge-coloured complete multipartite graphs which are colour-connected and have an alternating cycle factor.

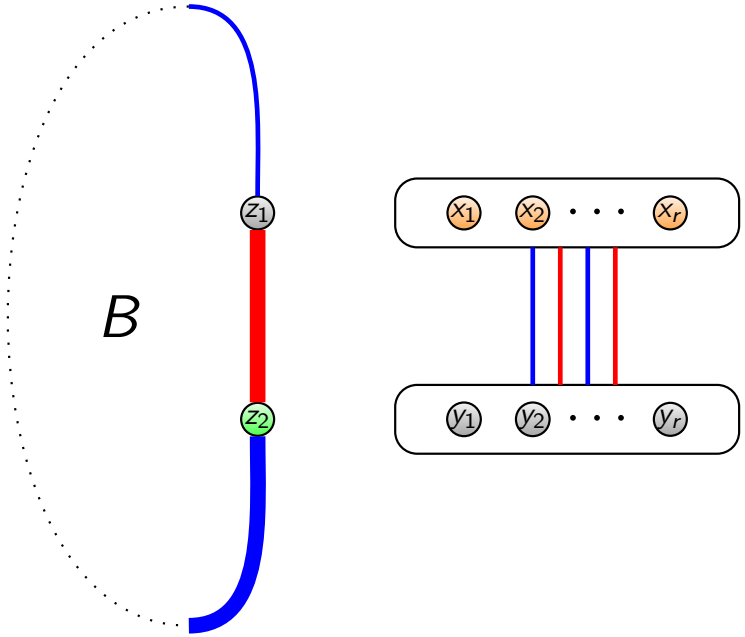

There is a eulerian factor.

It is trail-colour-connected. (see next page)

It is not supereulerian, as if T is a spanning eulerian subgraph, then

- $z_1z_2 \in E(T)$ (see z_1).
- z_1z_2 only red edge in T incident with z_2.
- x_1 cannot reach B starting with a red edge.
- So T does not exist.

2-edge-coloured complete multipartite graphs

Specific example on 8 vertices...

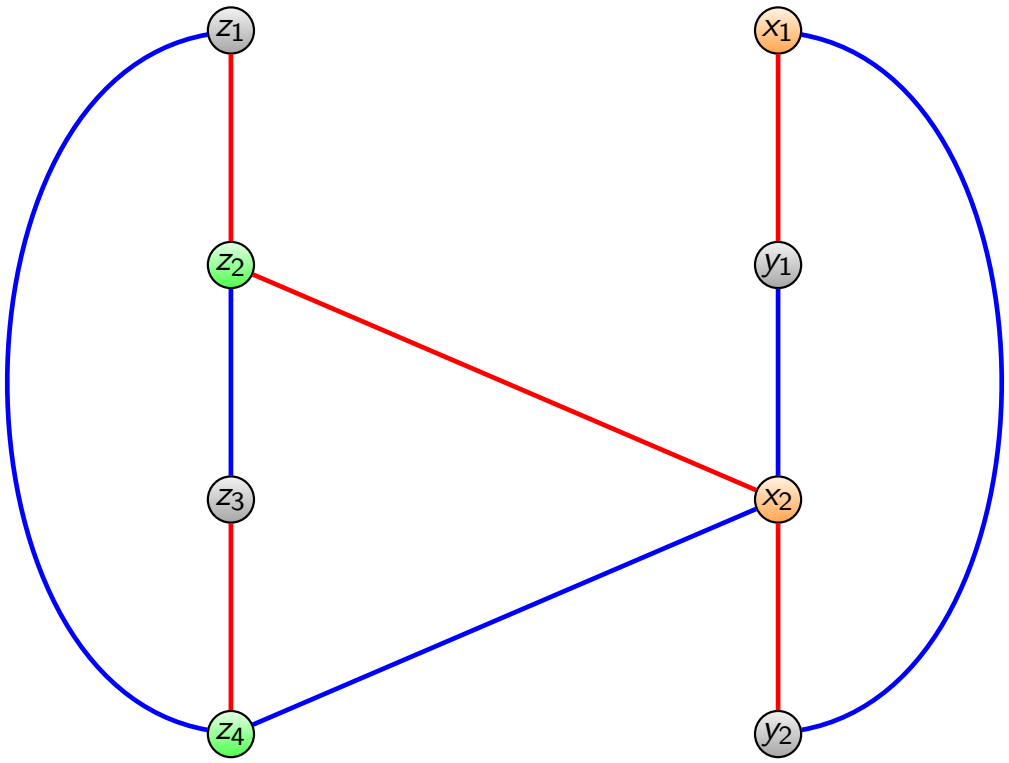

It is trail-colour-connected due to the above edges.
(one can reach the other cycle starting in either direction).

M-closed 2-edge-coloured graphs

Contreras-Balbuena, Galeana-Sánchez and Goldfeder considered a generalization of 2-edge-coloured complete graphs, called M-closed graphs.

That is, the end-vertices of every monochromatic path of length 2 are adjacent.

M-closed graphs generalize 2-edge-coloured complete graphs.

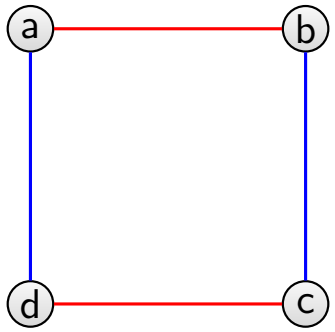

M-closed 2-edge-coloured graphs

They in fact proved the following.

Theorem 8. (AC, HG, IAG): If G is a M-closed 2-edge-coloured graph, then G has an alternating hamiltonian cycle if and only if it is colour-connected and has an alternating cycle factor.

We extend this to the following theorem.

Theorem 9. (JBJ, TB, AY): If G is a M-closed 2-edge-coloured graph, then G is supereulerian if and only if it is trail-colour-connected and has an eulerian factor.

The proof is too long and technical to give here.

M-closed 2-edge-coloured graphs

In fact we can show a slightly stronger result, which is the following.

Theorem 10. (JBJ, TB, AY): If G is an extension of a M-closed 2-edge-coloured graph, then G is supereulerian if and only if it is trail-colour-connected and has an eulerian factor.

The graph shown is an extension of a M-closed graph (but not a M-closed graph itself).

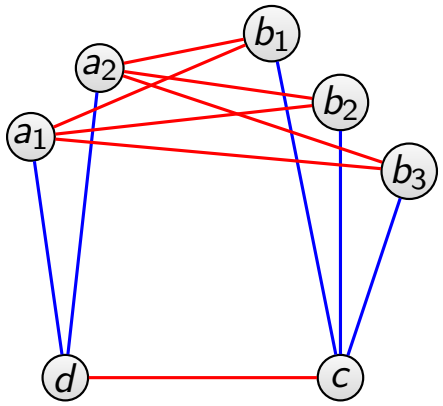

NP-hardness

It is known that the hamilton cycle problem is NP-hard for bipartite digraphs.

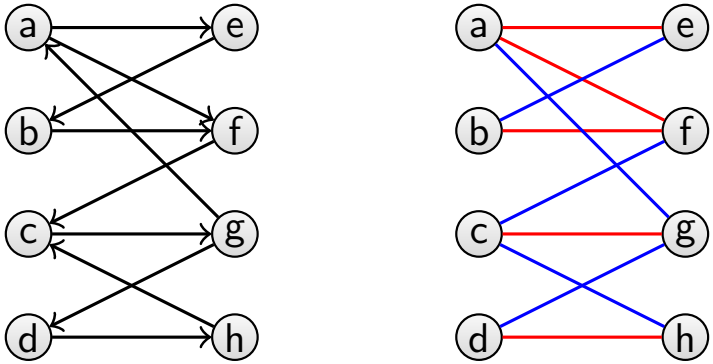

Using the "normal" reduction to 2-edge-coloured graphs we see that the alternating hamilton cycle problem in 2-edge-coloured graphs is also NP-hard (this was known).

We now reduce this problem to the "supereulerian"-problem.

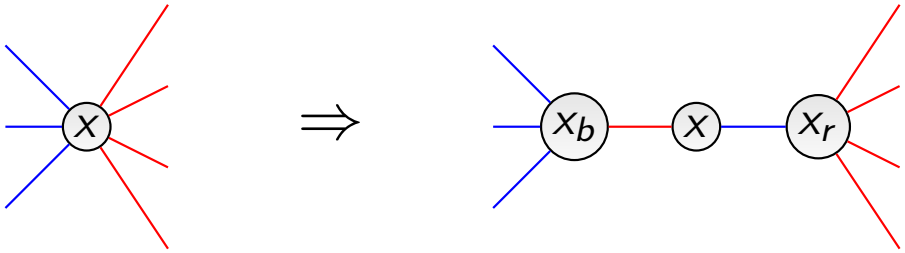

NP-hardness

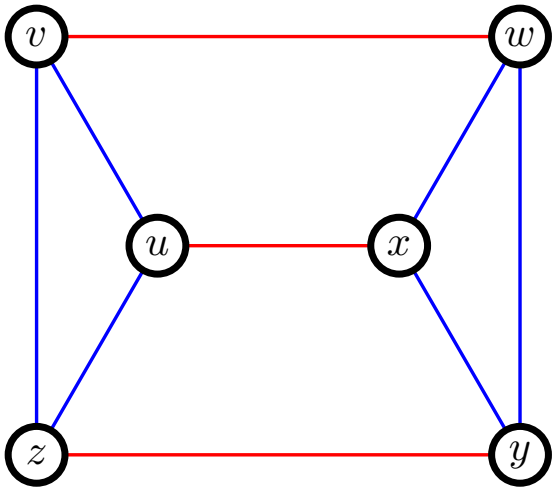

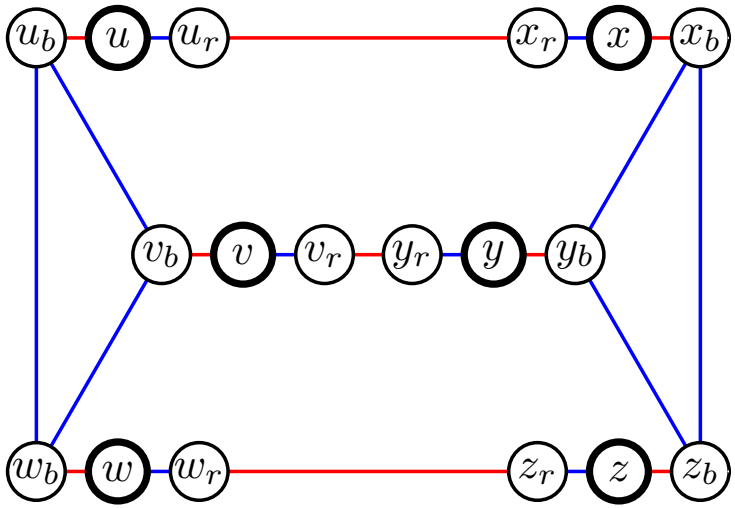

- A non-hamiltonian graph G.
- The associated graph G' is not supereulerian.

We have now proved the previously mentioned theorem.

Theorem 1. (JBJ, TB, AY): It is NP-hard to decide if a 2-edge-colored graph supereulerian.

Open problems

Conjecture 1 (JBJ, TB, AY): There exists a polynomial algorithm for deciding whether a 2-edge-coloured complete multipartite graph is supereulerian.

Problem 2 (JBJ, TB, AY): What is the complexity of deciding whether a 2-edge-coloured complete multipartite graph has an alternating hamiltonian cycle? Is there a good characterization?

Problem 3 (This talk): Are there other classes of 2-edge-coloured graphs which are supereulerian if and only if they are trail-colour-connected and contain a eulerian factor? And if so, which?

The end

The End

Thank you to the organiseres for doing such a great job in these difficult times!

Any questions?